V3V-FLEX UNDERWATER TOW TANK SYSTEM

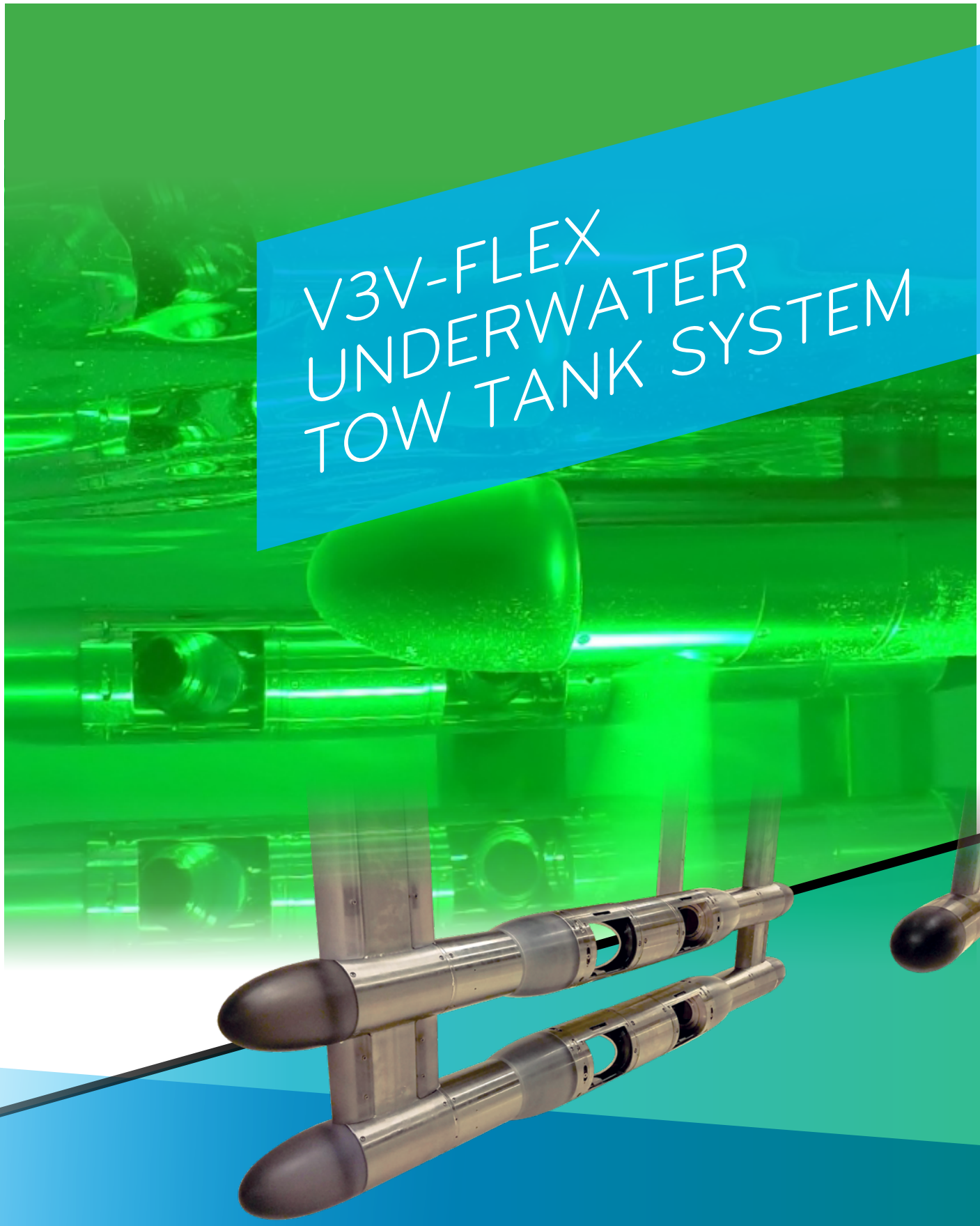

Photo courtesy of Purdue University

VOLUMETRIC PIV SYSTEM WITH MODULAR DESIGN

TSI now supplies a unique towing tank underwater V3V-Flex volumetric PIV system for measurements of velocity within tow-tank facilities. The system is ideal for measuring the velocity behind propellers and flows around ship models.

The system offers a modular design to allow various system configurations to meet specific applications from planar 2D PIV and Stereo-PIV, to full volumetric V3V-Flex. The design allows for a variety of different cameras to be placed inside the housing giving plenty of options concerning pixel resolution and frame rates.

The streamlined duel strut design allows the cameras and laser optics to be located underwater for the sharpest images possible and the least amount of distortion with minimal impact on the flow.

Operation of the system is controlled through the powerful INSIGHTV3V-DPIR software package which streamlines the image capture, calibration, and vector processing, perfectly suited for TSI's patented dense particle identification and reconstruction (DPIR) algorithm. The camera focus, aperture and Scheimpflug angle adjustments are all performed remotely through the use of high-precision motors.

The unique modular design allows for measurements around many different types of models as well as regions of interest. Different configurations of the cameras within the probe and positions between the camera and laser probes offer flexibility for optimizing the arrangement and subsequently achieving the most desirable measurement results.

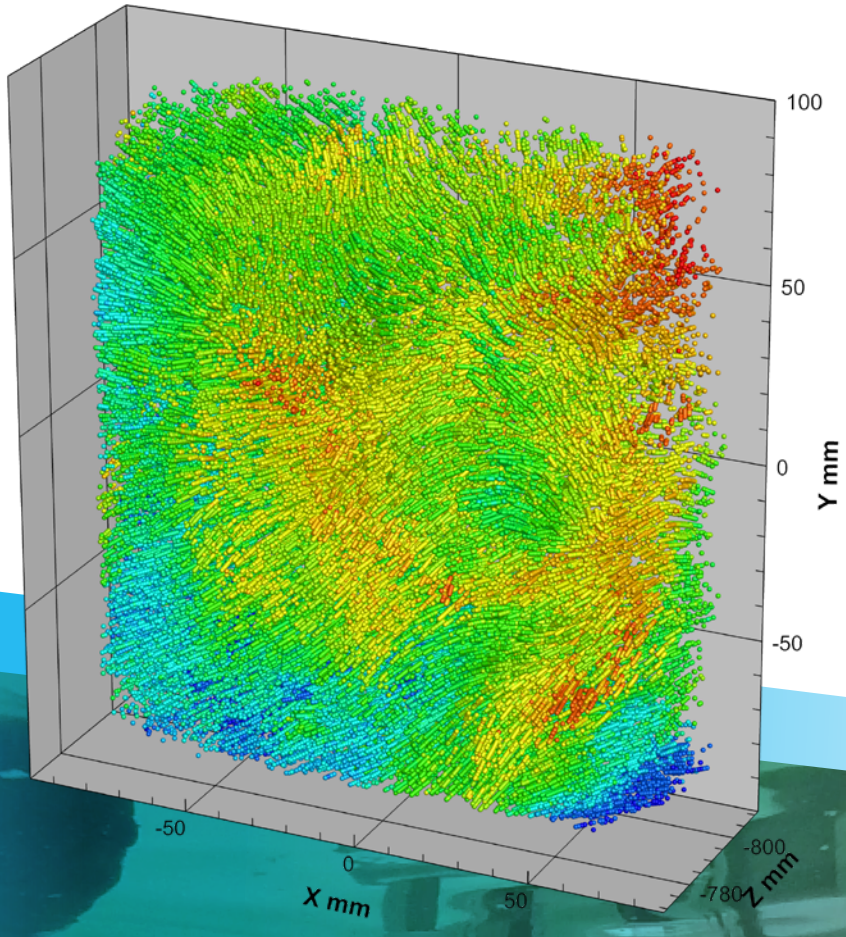

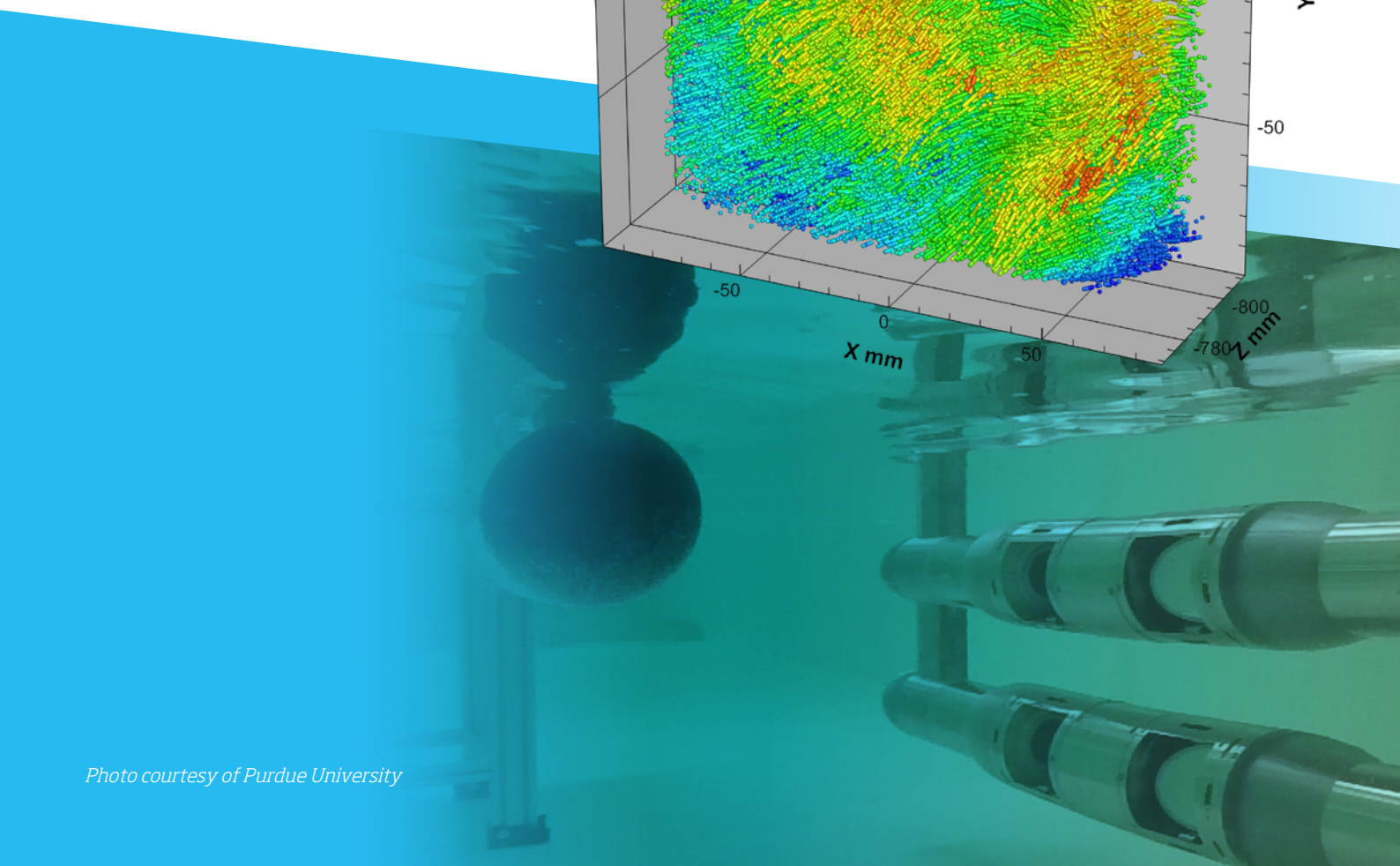

Photo courtesy of Purdue University

The V3V-Flex Tow Tank System consists of four main modules containing: cameras, mirrors, laser volume optics, and support struts. In addition, the hydrodynamic cones provide a streamlined shape which minimizes the flow disturbance in the measurement region.

Different spacers can be positioned between the cameras in order to increase or decrease the camera spacing thereby increasing the measurement accuracy. A variety of TSI's popular PowerView cameras and all brands of Nd:YAG lasers can be used with the system.

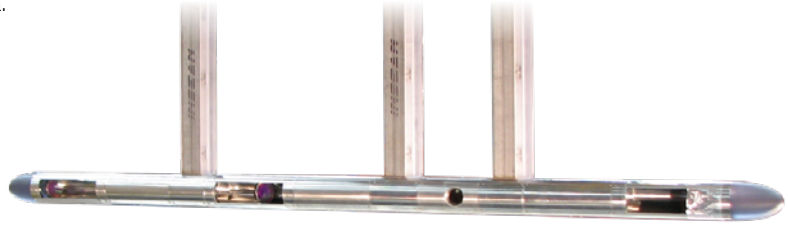

Photo courtesy of CNR-INM, National Research Council-Institute of Marine Engineering

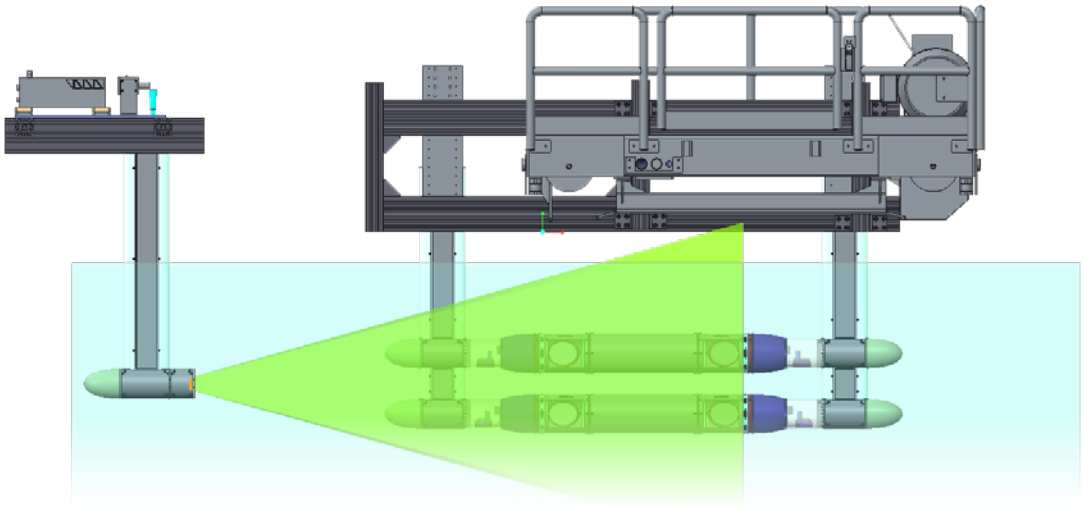

The **camera modules** include motorized Scheimpflug rotating mounts for the PowerView cameras. The camera mount is also equipped with motorized adjustments for the focus and aperture of the camera lens.

The **mirror modules** consist of a sliding and rotating mirror, allowing for the camera view to be adjusted for the viewing area. The mirror module is exposed to the fluid to minimize the distortion due to the liquid/gas interface. The mirror also contains a protective coating to protect the mirrored surface from damage.

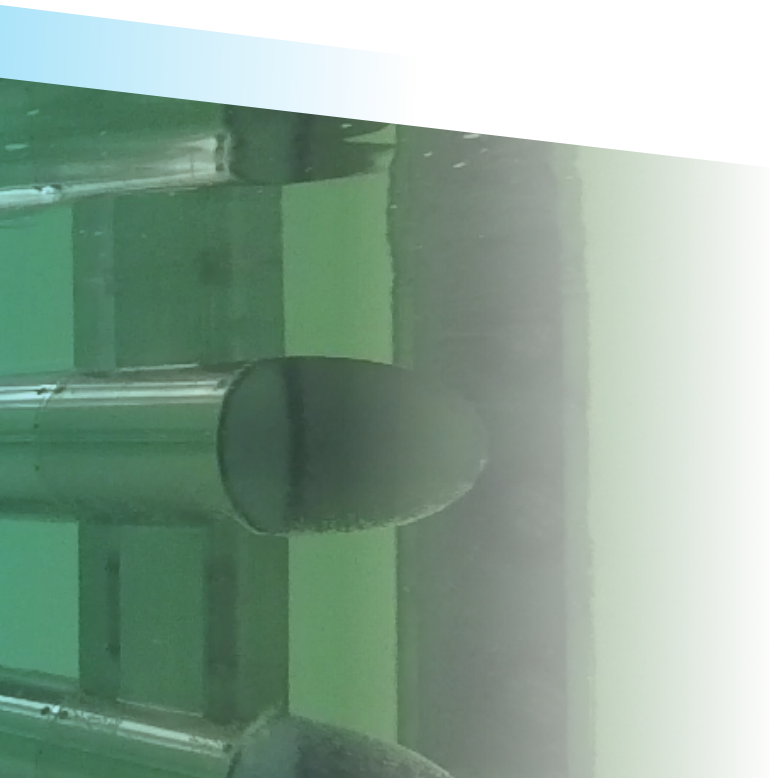

The **laser volume optics module** can be contained in a separate strut/probe assembly providing a high degree of flexibility for illuminating the measurement region, whether it is from upstream, downstream, above or below. Alternatively, the laser volume optics module can be integrated into the camera strut modules for a more compact design. A laser light arm is included within the support strut to bring the laser light beam to the laser volume optics. The module contains a set of cylindrical lenses in order to adjust the volume illumination ideally.

The **strut modules** provide the support and attachment points of the system to the tow-tank carriage, as well as the water-tight pathway for the camera and motor cabling. The struts can be mounted onto a traverse system to allow positioning of the system for specific measurements. The standard length of the struts is 1 meter, however longer or shorter strut lengths are available depending on the application.

The V3V-Flex Underwater Tow Tank System is a flexible and versatile velocity measurement system ideally suited for tow tank applications.

TSI Joins America's Cup Challenger American Magic as Team Partner

"TSI is excited to partner with the American Magic team and support their quest to regain the Cup. Our expertise in fluid mechanics will help optimize the performance of the American Magic boats," said Dr. Tom Kennedy, President of TSI Incorporated. "Additionally, our participation in nanoparticle research gives us a unique perspective into new and advanced materials for the sailing industry."

Photo courtesy of New York Yacht Club American Magic 2019.

Specifications are subject to change.

To see our list of patents please visit: **www.tsi.com/patents**

TSI and the TSI logo are registered trademarks of TSI Incorporated.

UNDERSTANDING, ACCELERATED

TSI Incorporated - Visit our website **www.tsi.com** for more information.

USA	**Tel:** +1 800 874 2811	**India**	**Tel:** +91 80 67877200
UK	**Tel:** +44 149 4 459200	**China**	**Tel:** +86 10 8219 7688
France	**Tel:** +33 1 41 19 21 99	**Singapore**	**Tel:** +65 6595 6388
Germany	**Tel:** +49 241 523030		

P/N 5002451 Rev A (A4) ©2019 TSI Incorporated Printed in U.S.A.